TI01790C/07/EN/02.25-00
71722767
2025-09-23

Technical Information
Memosens CCS53E

Digital sensor with Memosens technology for determining total chlorine



Application

The Memosens CCS53E sensor for total chlorine measures reliably in:
- Wastewater treatment plants: to monitor disinfection in the outlet and enable reuse of the wastewater
- Process water and utilities: to detect chlorine and avoid any damage, for example in cooling towers
- Food and beverage industry: to ensure hygienic filling and high food quality in washing water, for example
- Drinking water - to ensure adequate disinfection without overdosing
- Swimming pools - to dose the disinfectant as efficiently as possible

Advantages

- The sensor provides reliable measured values even after longer periods when no chlorine is present. It is not deactivated but starts the measurement right away once chlorine is present. This enables a quick response to process changes and ensures compliance with regulations.
- The low-maintenance, amperometric total chlorine sensor reduces the measuring point's operating costs, particularly compared with colorimetric measuring systems.
- Sensor replacement is particularly fast thanks to Memosens 2.0 technology and precalibration of the sensor. This, together with the fast polarization time of the sensor, increases plant availability.
- Easy combination with other relevant parameters of liquid analysis such as pH by easily connecting the Liquiline multiparameter transmitter.
- Wide measurement range for different applications: From zero to trace measurement up to total chlorine concentrations of 20 mg/l.

Endress+Hauser
People for Process Automation

Function and system design

Measuring principle

Total chlorine levels are determined in accordance with the amperometric measuring principle.

In this context, the following compounds are referred to collectively as total chlorine:
- Free chlorine: hypochlorous acid (HOCl), hypochlorite ions (OCl^-)
- Inorganic combined chlorine
- Organic combined chlorine, e.g. cyanuric acid derivatives

Chloride (Cl^-) is not recorded.

The sensor is a membrane-covered, two-electrode sensor. A gold working electrode is used as the working electrode. A counter electrode coated in silver halide is used as the counter and reference electrode.

The membrane cap, which is filled with electrolyte, constitutes the measuring chamber. The measuring electrodes are immersed in the measuring chamber. The measuring chamber is separated from the medium by means of a microporous membrane. The chlorine compounds in the medium penetrate through the sensor membrane.

The constant polarization voltage present between the two electrodes causes the electrochemical reaction of the chlorine compounds at the working electrode. Electron donation at the working electrode and electron acceptance at the counter-electrode cause a current to flow. In the operational range of the sensor, this current flow is proportional to the chlorine concentration under constant conditions and is only slightly pH-dependent in the case of this sensor type. The transmitter uses the current signal to calculate the measured variable for concentration in mg/l (ppm).

Operating principle

The sensor consists of:
- Membrane cap (bypass with membrane)
- Sensor shaft with counter electrode with large surface area and a working electrode embedded in plastic

The electrodes are in an electrolyte which is separated from the medium by a membrane. The membrane prevents the electrolyte from leaking and protects against contaminant penetration.

The measuring system is calibrated by means of a colorimetric comparison measurement in accordance with the DPD method for total chlorine. The determined reference value is entered into the transmitter, where it is used for adjustment.

Cross-sensitivity

- Oxidants, such as bromine, iodine, ozone, chlorine dioxide, permanganate, peracetic acid and hydrogen peroxide result in higher readings than expected.
- Reducing agents, such as sulfides, sulfites, thiosulfates and hydrazine, result in lower readings than expected.

Measuring system

A complete measuring system comprises:
- Disinfection sensor CCS53E (membrane-covered, Ø25 mm (0.98 in)) with appropriate mounting adapter
- Flowfit CYA27 flow assembly
- Measuring cable CYK10, CYK20
- Transmitter, e.g. Liquiline CM44x with firmware 01.13.00 or higher or CM44xR with firmware 01.13.00 or higher
- Optional: extension cable CYK11
- Optional: proximity switch
- Optional: Flexdip CYA112 immersion assembly

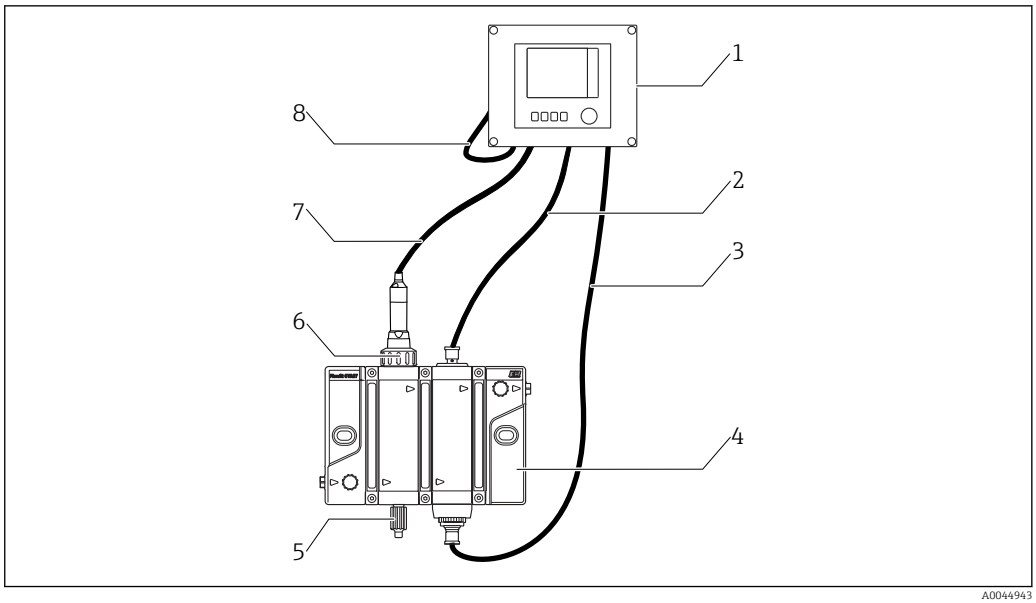

1 *Example of a measuring system*

1 *Transmitter Liquiline CM44x or CM44xR*
2 *Cable for inductive switch*
3 *Cable for status lighting on assembly*
4 *Flowfit CYA27 flow assembly*
5 *Sampling valve*
6 *Disinfection sensor Memosens CCS53E (membrane-covered, Ø25 mm (0.98 in))*
7 *Measuring cable CYK10*
8 *Power supply cable Liquiline CM44x or CM44xR*

Reliability

Dependability

Memosens

Memosens makes your measuring point safer and more reliable:
- Non-contact, digital signal transmission enables optimum galvanic isolation
- Dust- and waterproof (IP 68)
- Sensor can be calibrated in a lab, thus increasing the availability of the measuring point in the process
- Predictive maintenance thanks to recording of sensor data, e.g.:
  - Total hours of operation
  - Hours of operation with very high or very low measured values
  - Hours of operation at high temperatures
  - Calibration history

Ease of maintenance

Easy handling

Sensors with Memosens technology have integrated electronics that store calibration data and other information (e.g. total hours of operation or hours of operating under extreme measuring conditions). Once the sensor has been connected, the sensor data are transferred automatically to the transmitter and used to calculate the current measured value. As the calibration data are stored in the sensor, the sensor can be calibrated and adjusted independently of the measuring point. The result:
- Easy calibration in the measuring lab under optimum external conditions increases the quality of the calibration.
- Precalibrated sensors can be replaced quickly and easily, resulting in a noticeable increase in the availability of the measuring point.
- Thanks to the availability of the sensor data, maintenance intervals can be accurately defined and predictive maintenance is possible.
- The sensor history can be documented on external data carriers and evaluation programs.
- Thus, the current application of the sensor can be determined depending on its previous history.

Security

Data security thanks to digital data transmission
Memosens technology digitizes the measured values in the sensor and transmits the data to the transmitter via a non-contact connection that is free from potential interference. The result:
- Automatic error message if sensor fails or connection between sensor and transmitter is interrupted
- Immediate error detection increases measuring point availability

Input

Measured variables	Total chlorine	[mg/l, µg/l, ppm, ppb]
		▪ Free chlorine:
		  ▪ Hypochlorous acid (HOCl)
		  ▪ Hypochlorite ions (OCl^-)
		▪ Combined chlorine (chloramines)
		▪ Inorganically combined chlorine (e.g. cyanuric acid derivatives)

	Temperature	[°C, °F]
Measuring range	Version CCS53E-**11AD**	0 to 5 mg/l (ppm) total chlorine
	Version CCS53E-**11BF**	0 to 20 mg/l (ppm) total chlorine
Signal current	Version CCS53E-**11AD**	8 to 20 nA per 1 mg/l (ppm) HOCl
	Version CCS53E-**11BF**	8 to 20 nA per 1 mg/l (ppm) HOCl

Power supply

Electrical connection

is electrically connected to the transmitter is performed via the Memosens data cable CYK10 .

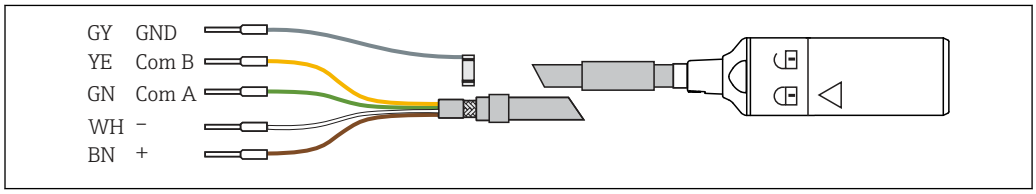

2 Measuring cable CYK10

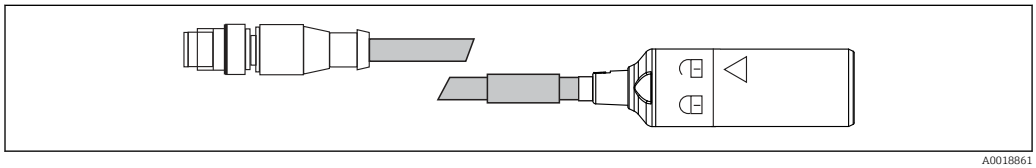

3 CYK10 data cable with M12 plug, electrical connection

Performance characteristics

Reference operating conditions	Temperature	20 °C (68 °F)
	pH value	pH 7.5 ±0.2
	Flow	40 to 60 cm/s (15.7 to 23.6 in/s)
	HOCl-free base medium	Mains water

Response time	T_{90} < 180 s (after completing polarization)	
Polarization time	Initial commissioning	45 min
	Recommissioning	20 min
Measured value resolution	0.05 % of the measured value maximum. [1)]	

Measurement error

±2 % and ±5 µg/l (ppb) of value measured (depending on which value is higher)

	LOD (limit of detection) [1)]	LOQ (limit of quantification)
Version CCS53E-**11AD**	0.008 mg/l (ppm) HOCl	0.028 mg/l (ppm) HOCl
Version CCS53E-**11BF**	0.008 mg/l (ppm) HOCl	0.028 mg/l (ppm) HOCl

1) Based on ISO 15839. The measurement error includes all the uncertainties of the sensor and transmitter (measuring chain). It does not contain all the uncertainties caused by the reference material and adjustments that may have been performed.

Repeatability	Version CCS53E-**11AD**	0.004 mg/l (ppm)
	Version CCS53E-**11BF**	0.007 mg/l (ppm)
Nominal slope	Version CCS53E-**11AD**	11 nA per 1 mg/l (ppm) HOCl
	Version CCS53E-**11BF**	11 nA per 1 mg/l (ppm) HOCl
Long-term drift	< 1 % per month (mean value, determined while operating at varying concentrations and under reference conditions with free chlorine)	
Operating time of the electrolyte	3 to 6 months (depending on the composition of the medium)	
Intrinsic consumption	The intrinsic consumption of chlorine at the sensor is negligible.	

Installation

Orientation

NOTICE

Do not install upside down!

There is no secured electrolyte film on the work electrode and therefore no sensor function.

- Install the sensor in an assembly, support or appropriate process connection at an angle of at least 15° to the horizontal.
- Other angles of inclination are not permitted.
- Follow the instructions for installing the sensor in the Operating Instructions of the assembly used.

1) Above the limit of quantification (LOQ) under reference operating conditions

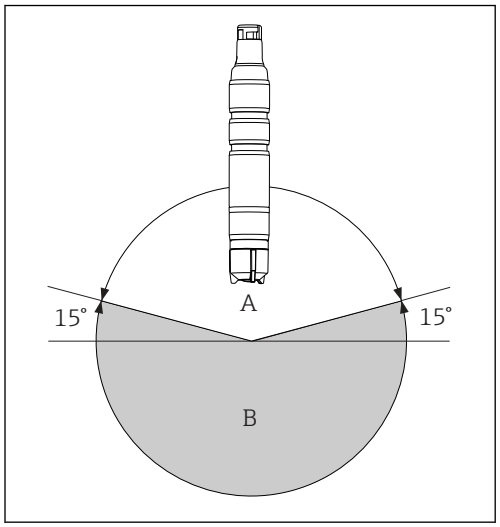

A *Permitted orientation*
B *Incorrect orientation*

Immersion depth

At least 50 mm (1.97 in).

This corresponds to the mark (▼) on the sensor.

Installation instructions

Installing the sensor in the Flowfit CYA27 assembly

The sensor can be installed in the Flowfit CYA27 flow assembly. In addition to the installation of the total chlorine sensor, this assembly also enables the simultaneous operation of several other sensors and flow monitoring.

Please note the following during installation:
- Guarantee the minimum flow to the sensor 15 cm/s (0.49 ft/s) and the minimum volume flow of the assembly (5 l/h or 30 l/h).
- If the medium is fed back into an overflow basin, pipe or similar, the resulting counterpressure on the sensor may not exceed 1 bar relativ (14.5 psi relativ) (2 bar abs. (29 psi abs.)) and must remain constant.
- Avoid a vacuum at the sensor, e.g. due to medium being returned to the suction side of a pump.
- To avoid buildup, heavily contaminated water should also be filtered.

Environment

Ambient temperature range

−20 to 60 °C (−4 to 140 °F)

Storage temperature range

	Long-term storage up to 2 years (maximum)	Storage up to 48 h (maximum)
With electrolyte	0 to 35 °C (32 to 95 °F) (non-freezing)	35 to 55 °C (95 to 131 °F)
Without electrolyte	−20 to 60 °C (−4 to 140 °F)	

Degree of protection

IP68 (1.8 m (5.91 ft)) water column over 7 days at 20 °C (68 °F)

Process

Process temperature range

0 to 55 °C (32 to 130 °F), non-freezing

Process pressure

The inlet pressure depends on the specific fitting and installation.

The measurement can take place with a free outlet.

The sensor can be operated at process pressures up to 1 bar relativ (14.5 psi relativ) (2 bar abs. (29 psi abs.)).

pH range

Range of effectiveness of total chlorine	pH 4 to 9 [1]
Calibration	pH 4 to 9
Measurement	pH 4 to 9

1) Up to pH 4 and in the presence of chloride ions (Cl^-), Cl_2 is produced which is also measured

Conductivity

The sensor can also be used in media with a very low conductivity, such as demineralized water.

Flow limit

At least 5 l/h (1.3 gal/h), in the Flowfit CYA27 flow assembly (5 l version)

At least 30 l/h (7.9 gal/h), in the Flowfit CYA27 flow assembly (30 l version)

Flow

At least 15 cm/s (0.5 ft/s) , e.g. with Flexdip CYA112 immersion assembly

- In terms of sensor condition and performance, it is essential that the flow velocity limits specified in the following table be observed.

	Flow velocity [cm/s]	Volume flow [l/h]		
		Flowfit CYA27 (5 l version)	Flowfit CYA27 (30 l version)	Flexdip CYA112
Minimum	15	5	30	The sensor is suspended freely in the medium; pay attention to the minimum flow velocity of 15 cm/s during installation.
Maximum	80	30	60	

In every assembly, the flow velocity corresponds to a certain volume flow. Please refer to the Operating Instructions of the assembly for the correct setting.

Mechanical construction

Dimensions

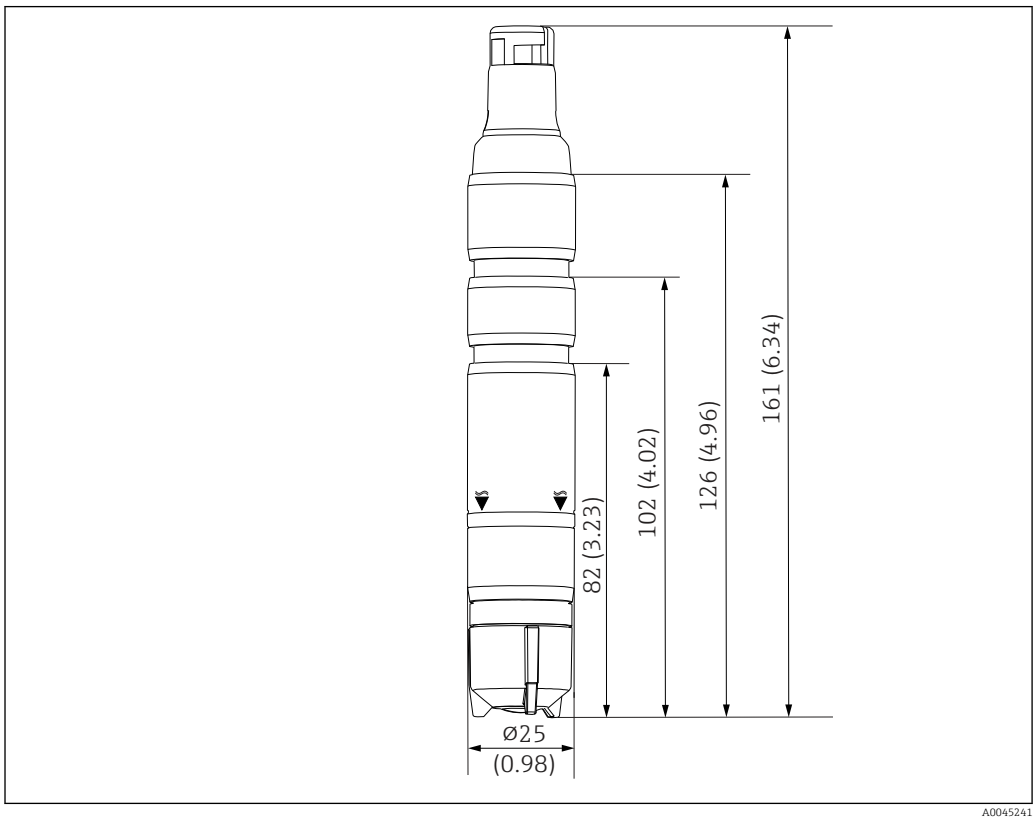

4 *Dimensions in mm (in)*

Weight

Sensor with membrane cap and electrolyte (without protection cap and without adapter)
Approx. 95 g (3.35 oz)

Materials

Sensor shaft	PVC
Membrane	PET/PVDF
Membrane cap	PVDF
Protective cap	▪ Vessel: PC ▪ Seal: TPE ▪ Cover: PC
Sealing ring	FKM
Sensor shaft coupling	PPS

Cable specification

max. 100 m (330 ft), incl. Cable extension

Certificates and approvals

Current certificates and approvals for the product are available via the Product Configurator at www.endress.com.

1. Select the product using the filters and search field.
2. Open the product page.

The **Configuration** button opens the Product Configurator.

Ordering information

Product page

www.endress.com/ccs53e

Product Configurator

Detailed ordering information is available from your nearest sales organization www.addresses.endress.com or in the Product Configurator at www.endress.com:

1. Select the product using the filters and search field.
2. Open the product page.
3. Select **Configuration**.

Product Configurator - the tool for individual product configuration
- Up-to-the-minute configuration data
- Depending on the device: direct input of information specific to the measuring point, such as the measuring range or operating language
- Automatic verification of exclusion criteria
- Automatic creation of the order code and its breakdown in PDF or Excel output format
- Ability to order directly in the Endress+Hauser Online Shop

Scope of delivery

The scope of delivery comprises:
- Disinfection sensor (membrane-covered, Ø25 mm) with protective cap (ready for use)
- Tube with electrolyte (50 ml (1.69 fl oz))
- Replacement membrane cap in protective cap
- Operating Instructions
- Manufacturer's certificate

Accessories

The following are the most important accessories available at the time this documentation was issued.

Listed accessories are technically compatible with the product in the instructions.

1. Application-specific restrictions of the product combination are possible.
   Ensure conformity of the measuring point to the application. This is the responsibility of the operator of the measuring point.
2. Pay attention to the information in the instructions for all products, particularly the technical data.
3. For accessories not listed here, please contact your Service or Sales Center.

▶ Contact your Sales Center.

Service-specific accessories

Maintenance kit CCV05

Order according to product structure

- 2 x membrane caps and 1 x electrolyte 50 ml (1.69 fl oz)
- 1 x electrolyte 50 ml (1.69 fl oz)
- 2 x sealing set

Device-specific accessories

Memosens data cable CYK10
- For digital sensors with Memosens technology
- Product Configurator on the product page: www.endress.com/cyk10

Technical Information TI00118C

Memosens data cable CYK11
- Extension cable for digital sensors with Memosens protocol
- Product Configurator on the product page: www.endress.com/cyk11

Technical Information TI00118C

Memosens laboratory cable CYK20
- For digital sensors with Memosens technology
- Product Configurator on the product page: www.endress.com/cyk20

Flowfit CYA27
- Modular flow assembly for multiparameter measurements
- Product Configurator on the product page: www.endress.com/cya27

Technical Information TI01559C

Flexdip CYA112
- Immersion assembly for water and wastewater
- Modular assembly system for sensors in open basins, channels and tanks
- Material: PVC or stainless steel
- Product Configurator on the product page: www.endress.com/cya112

Technical Information TI00432C

Photometer PF-3
- Compact hand-held photometer for determining the reference measured value
- Color-coded reagent bottles with clear dosing instructions
- Order No.: 71257946

Adapter kit CCS5x(D/E) for CYA27
- Clamping ring
- Thrust collar
- O-ring
- Order No. 71372027

Adapter kit CCS5x(D/E) for CYA112
- Adapter incl. O-rings
- 2 studs for locking in place
- Order No. 71372026

Complete quick fastener kit for CYA112
- Adapter, inner and outer parts incl. O-rings
- Tool for mounting and disassembly
- Order No. 71093377 or mounted accessory of CYA112

COY8
Zero-point gel for oxygen and disinfection sensors
- Disinfectant-free gel for the verification, zero point calibration and adjustment of oxygen and disinfection measuring points
- Product Configurator on the product page: www.endress.com/coy8

Technical Information TI01244C



www.addresses.endress.com

Endress+Hauser

People for Process Automation