Level | Pressure | Flow | Temperature | Liquid Analysis | Registration | Systems Components | Services | Solutions

Operating Instructions

# TMT122 DIN rail
# iTEMP® HART®

## Temperature Transmitter

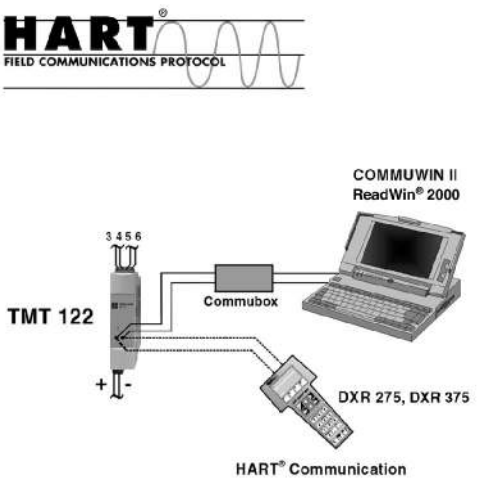





BA155R/24/ae/10.04
51006562

Endress+Hauser

People for Process Automation

# Table of Contents


**Safety Message** . . . . . 4

**Short form instructions** . . . . . 5

**1 Safety notes** . . . . . 6

1.1 Designated use . . . . . 6
1.2 Installation, commissioning and operation . . . . . 6
1.3 Operational safety . . . . . 7
1.4 Returns . . . . . 7
1.5 Safety pictograms and symbols . . . . . 7

**2 Identification** . . . . . 8

2.1 Unit identification . . . . . 8
2.2 Registered trademarks . . . . . 9
2.3 Delivery contents . . . . . 9

**3 Installation** . . . . . 9

3.1 Installation conditions . . . . . 9
3.2 Installation . . . . . 10
3.2.1 Typical North American installation . . . . . 10
3.2.2 Typical European installation . . . . . 11

**4 Wiring** . . . . . 12

4.1 Overview . . . . . 12
4.2 Measurement unit connection . . . . . 12
4.2.1 Sensors . . . . . 12
4.2.2 Output signal and power supply . . . . . 12
4.2.3 HART® connection . . . . . 12
4.3 Potential grounding . . . . . 13
4.4 Ground the Transmitter . . . . . 14

**5 Operation** . . . . . 14

5.1 Communication . . . . . 14
5.1.1 HART® Communicator DXR 275/375 . . . 14
5.1.2 COMMUWIN II-operating program . . . . . 15

**6 Commissioning** . . . . . 16

6.1 Installation and function check . . . . . 16
6.2 Commissioning . . . . . 16
6.2.1 Quick Setup . . . . . 16
6.2.2 Configuration with HART® protocol and DXR 275/375 hand operated module . . . . . 17
6.2.3 Configuration with HART® protocol and COMMUWIN II . . . . . 18
6.2.4 Configuration using HART® protocol and PC configuration software ReadWin® 2000 . . 20
6.2.5 Description of unit functions . . . . . 21
6.2.6 Supported HART® commands . . . . . 25

**7 Maintenance** . . . . . 26

**8 Accessories** . . . . . 26

**9 Trouble-shooting** . . . . . 26

9.1 Trouble-shooting instructions . . . . . 26
9.2 Application fault messages . . . . . 26
9.3 Application faults without messages . . . . . 27
9.4 Returns . . . . . 28
9.5 Disposal . . . . . 28
9.6 Software history . . . . . 29

**10 Technical Data** . . . . . 29

10.1 Function and system design . . . . . 29
10.2 Input . . . . . 29
10.3 Output . . . . . 30
10.4 Power supply . . . . . 31
10.5 Performance characteristics . . . . . 31
10.6 Installation conditions . . . . . 32
10.7 Environmental conditions . . . . . 33
10.8 Mechanical construction . . . . . 33
10.9 Human interface . . . . . 34
10.10 Certificates and approvals . . . . . 34

# Safety Message

Instructions and procedures in the operating instructions may require special precautions to ensure the safety of the personnel performing the operations. Information that potentially raises safety issues is indicated by safety pictograms and symbols. Please refer to the safety messages before performing an operation preceded by pictograms and symbols, see chapter 1.5.

Though the information provided herein is believed to be accurate, be advised that the information contained herein is NOT a guarantee of satisfactory results. Specifically, this information is neither a warranty nor guarantee, expressed or implied, regarding performance; merchantability, fitness, or other matter with respect to the products; and recommendation for the use of the product / process information in conflict with any patent. Please note that Endress+Hauser reserves the right to change and / or improve the product design and specifications without notice.



Warning!

**Failure to follow these installation guidelines could result in death or serious injury.**

– Make sure only qualified personnel perform the installation.

**Explosions could result in death or serious injury.**

– Do not remove the connection head cover in explosive atmospheres when the circuit is live.
– Before connecting a Model 275/375 HART® Communicator in an explosive atmosphere, make sure the instruments in the loop are installed in accordance with instrinsically safe or non-incendive field wiring practices.
– Verify that the operating atmosphere of the transmitter is consistent with the appropriate hazardous locations certifications.
– All connection head covers must be fully engaged to meet explosion-proof requirements.

**Process leaks could result in death or serious injury.**

– Do not remove the thermowell while in operation.
– Install and tighten thermowells and sensors before applying pressure

**Electrical shock could cause death or serious injury.**

– Use extreme caution when making contact with the leads and terminals.

# Short form instructions

Using the following short form instructions you can commission your system easily and quickly:

| | |
|---|---|
| **Safety notes** | page 6 |
| ↓ | |
| **Installation** | page 9 |
| ↓ | |
| **Wiring** | page 12 |
| ↓ | |
| **Commissioning (including a description of the unit functions)**<br>A complete description of all the functions as well as a detailed overview of the function matrix can be found in this chapter.<br>**Quick Setup - Fast entry into the unit configuration for standard measuring.** | page 16 |
| ↓ | |
| **Trouble-shooting / fault-finding**<br>If problems occur after commissioning or during operation always start fault finding using the check list. Special questions will act as a guide to the cause of the fault and the necessary cure. | page 26 |

# 1 Safety notes

Safe and secure operation of the DIN rail transmitter can only be guaranteed if the operating instructions and all safety notes are read, understood and followed.

## 1.1 Designated use

**Designated use**

- The unit is a universal, presettable temperature transmitter for resistance thermometer (RTD), thermocouple (TC) as well as resistance and voltage sensors. The unit is constructed for mounting on a DIN rail.
- The manufacturer cannot be held responsible for damage caused by misuse of the unit.
- Separate Ex documentation is part of this operating manual, for measurement systems in hazardous areas. The installation conditions and connection values indicated in these instructions must be followed!

## 1.2 Installation, commissioning and operation

**Installation, commissioning and operation**

The unit is constructed using the most up-to-date production equipment and complies to the safety requirements of the local guidelines. The TMT122 temperature transmitter is fully factory tested according to the specifications indicated on the order. However, if it is installed incorrectly or is misused, certain application dangers can occur. Installation and wiring of the unit must only be done by trained, skilled personnel who are authorized to do so by the plant operator. This skilled staff must have read and understood these instructions and must follow them to the letter. The plant operator must make sure that the measurement system has been correctly wired to the connection schematics. Due to its construction, the transmitter cannot be repaired. When disposing of the DIN rail transmitter, please take note of the local disposal regulations.

Electrical temperature sensors such as RTD's and thermocouples produce low-level signals proportional to their sensed temperature. The TMT122 temperature transmitter converts the low-level sensor signal to a standard 4 to 20 mA DC signal that is relatively insensitive to lead length and electrical noise. This current signal is then transmitted to the control room via two wires.

The transmitter can be commissioned before or after installation. It may be useful to commission it on the bench, before installation, to ensure proper operation and to become familiar with its functionality. Make sure the instruments in the loop are installed in accordance with intrinsically safe or non-incendive field wiring practices before connecting a HART® communicator in an explosive atmosphere.

The printed circuit board of the transmitter is protected by the DIN rail housing, resisting moisture and corrosive damage. Verify that the operating atmosphere of the transmitter is consistent with the appropriate hazardous locations certifications.



Warning!
Electrical shock could cause death or serious injury. If the sensor is installed in a high voltage environment and a fault or installation error occurs, high voltage may be present on the transmitter leads and terminals.

**SAFETY INSTRUMENTED SYSTEMS (SIS)**
Third party validated metrics are available for the TMT122 temperature transmitter. Testing is done per IEC 61508 for Safety Instrumented Systems. The safety manual can be ordered separately under order code: **SD007R09EN**.

More details and download see: **www.us.endress.com**

## 1.3 Operational safety

**Operational safety**

**Hazardous areas**
When installing the unit in a hazardous area, the national safety requirements must be met. Make sure that all personnel are trained in these areas. Strict compliance with installation instructions and ratings as stated in this documentation is mandatory.

The measuring device complies with the general safety requirements in accordance with IEC61010, the EMC requirements of IEC61326 and NAMUR recommendation NE21 and NE43.

**Technical advancement**
The manufacturer reserves the right to modify technical data without prior notice. Your E+H distributor can supply you with current information and updates to these Operating Instructions.

## 1.4 Returns

**Returns**

Please follow the Return Authorization Policy at the end of these instructions.

## 1.5 Safety pictograms and symbols

**Safety pictograms and symbols**

Safe and reliable operation of this unit can only be guaranteed if the safety notes and warnings in these operating instructions are followed. The safety notes in these instructions are highlighted using the following symbols.



Note!
This icon indicates activities and actions that, if not followed correctly, could have an indirect influence on the unit operation or could lead to an unforeseen unit reaction.



Caution!
This icon indicates activities and actions that, if not followed correctly, could lead to faulty unit operation or even damage to the unit.



Warning!
This icon indicates activities and actions that, if not followed correctly, could lead to personal injury, a safety risk or even total damage to the unit.






**Explosion protected, type examined operating equipment**
If one of these icons is on the device's nameplate, the device can be used in hazardous areas.




**Hazardous area**
This symbol identifies the hazardous area in the diagrams in these Operating Instructions.
– Devices that are used in hazardous areas or cables for such devices must have the corresponding type of protection.




**Safe area (non-hazardous areas)**
This symbol identifies the non-hazardous area in the diagrams in these Operating Instructions.
– Devices in non-hazardous areas must also be certified if connection cables run through a hazardous area.

# 2 Identification

## 2.1 Unit identification

**Unit identification**

Compare the legend plates on the DIN rail transmitter with the following figures:




*fig. 1: DIN rail transmitter legend plate (examples)*




*fig. 2: Identification for hazardous area use (example, only on FM certified units)*

**CE Mark, declaration of conformity** CE

The devices are designed to meet state-of-the-art safety requirements, have been tested, and left the factory in a condition in which they are safe to operate. The devices comply with the applicable standards and regulations in accordance with IEC61010 "Protection Measures for Electrical Equipment for Measurement, Control, Regulation and Laboratory Procedures" and with the EMC requirements of IEC61326.
The measuring system described in these Operating Instructions thus complies with the statutory requirements of the EC Directives. Endress+Hauser confirms successful testing of the device by affixing to it the CE mark.

**UL recognized component to UL 3111-1** c UL us

**GL German Lloyd marine approval** GL

GL Type Approval for temperature measurements in hazardous locations on GL Classed Vessels, Marine and Offshore Installations.

## 2.2 Registered trademarks

- HART®
  Registered trademark of HART® Communication Foundation, Austin, Tx, USA
- PROFIBUS®
  Registered trademark of PROFIBUS Nutzerorganisation e. V., Karlsruhe, Germany
- Microsoft® Windows NT® and Windows® 2000
  Registered trademarks of Microsoft Corporation, Redmond, USA
- iTEMP® and ReadWin® 2000
  are registered trademarks of Endress+Hauser Wetzer GmbH + Co. KG, Nesselwang, Germany

## 2.3 Delivery contents

**Delivery contents**

The delivery contents of a DIN rail temperature transmitter are as follows:
- Transmitter TMT 122
- Operating instructions
- Control drawing for use in hazardous areas

# 3 Installation

## 3.1 Installation conditions

**Installation conditions**

Caution!
The unit must only be powered by a power supply that operates using an IEC 61010-1 compliant energy limited circuit: 'SELV or Class 2 circuit'.

- When installing and operating the unit, please take note of the allowable ambient temperature (see chapter 10 "Technical Data").
- When using the unit in a hazardous area, the limits indicated in the certification must be adhered to (see control drawing).

**Dimensions**
The DIN rail transmitter dimensions can be found in chapter 10 "Technical Data".

**Installation point**
Installation on DIN rail according to EN 50 022-35, e.g. in control panel.

**Installation angle**
There are no limits as to the angle of installation.

# 3.2 Installation

## 3.2.1 Typical North American installation

**Installation**

For installation, proceed as follows:

- Attach the TMT 122 transmitter to a suitable rail or panel.
- Attach thermowell (1) to pipe or process container wall. Install and tighten the thermowell before applying process pressure.
- Attach necessary extension nipples and adapters (3) to the thermowell (1). Seal the nipple and adapter threads with silicone tape.
- Screw the sensor (2) into the thermowell (1). Install drain seals if required for harsh environments or to satisfy code requirements.
- Screw the connection head (4) to the sensor assembly.
- Attach the sensor lead wires to the connection head terminals.
- Connect sensor wires from the terminals inside the head to the TMT 122 transmitter (5).
- Install and tighten the connection head cover. Enclosure covers must be completely engaged to meet explosion-proof area requirements.

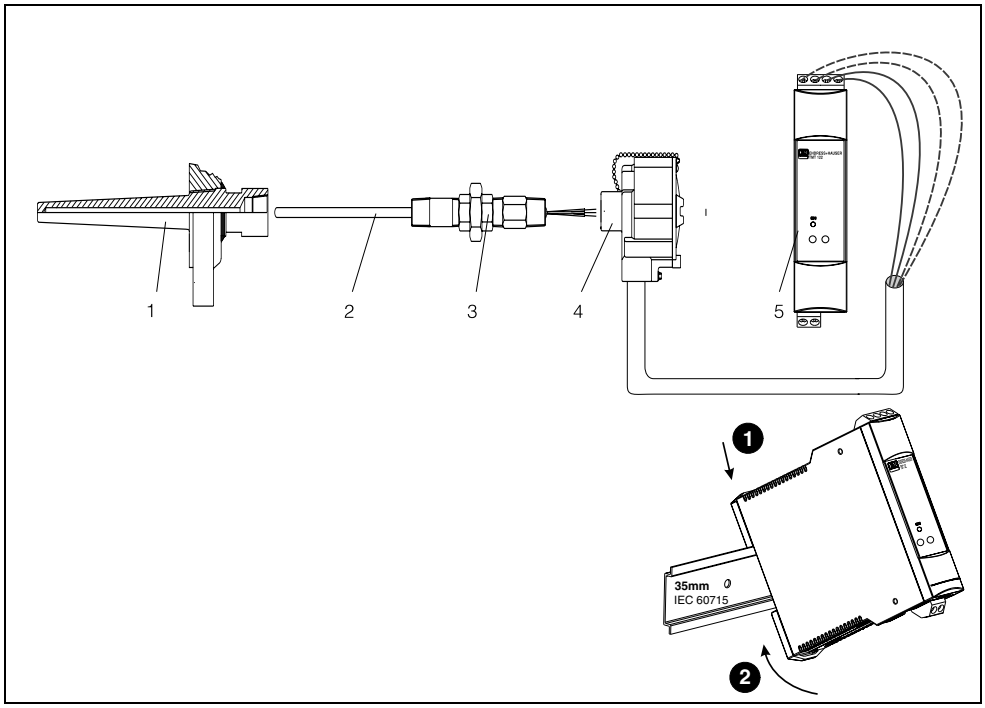


*fig. 3: Installation of DIN rail TMT 122 transmitter.*

1 thermowell
2 sensor
3 extension nipples and adapters
4 connection head
5 TMT 122 transmitter

### 3.2.2 Typical European installation

For installation, proceed as follows:

- Attach the TMT 122 transmitter to a suitable rail or panel.
- Attach thermowell to pipe or process container wall. Install and tighten the thermowell before applying any pressure.
- Attach and connect appropriate lengths of sensor lead wire from the connection head to the sensor terminal block.
- Tighten the connection head cover. Enclosure covers must be completely engaged in order to meet explosion-proof area requirements.
- Run the sensor lead wires from the sensor assembly to the TMT 122 transmitter.
- Attach the sensor wires to the TMT 122 transmitter.

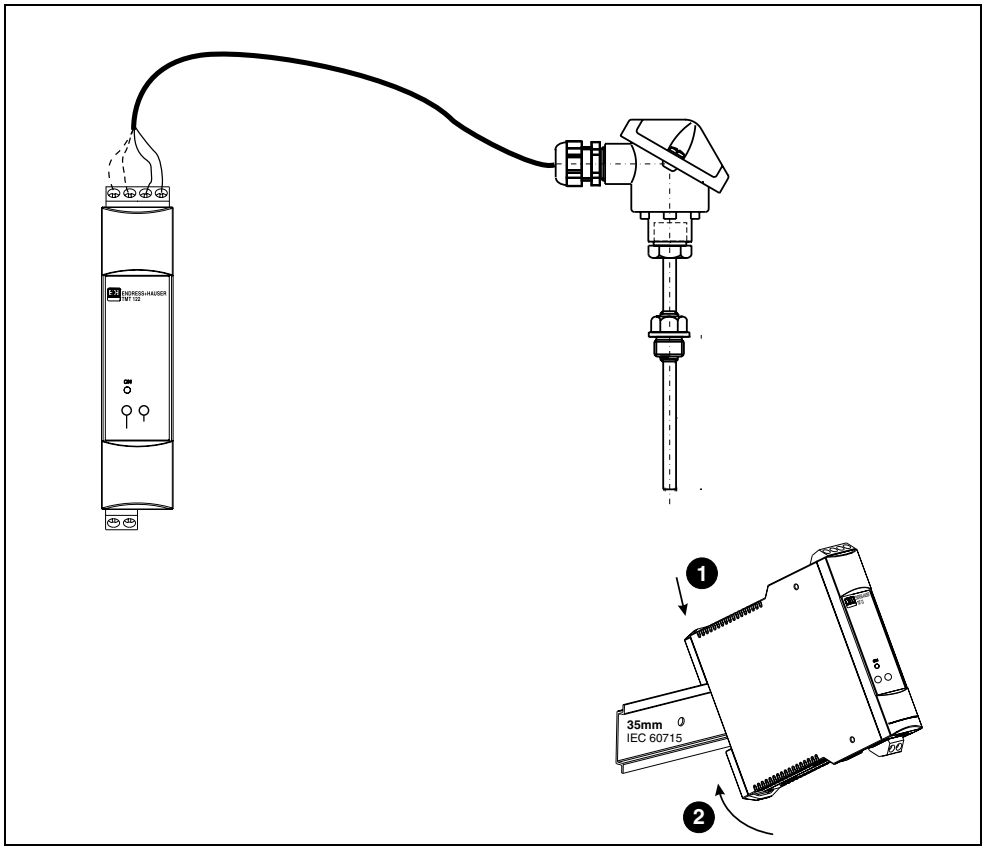


*fig. 4: Installing the TMT 122 DIN rail transmitter*

# 4 Wiring

## 4.1 Overview

**Wiring overview**

**Terminal layout**

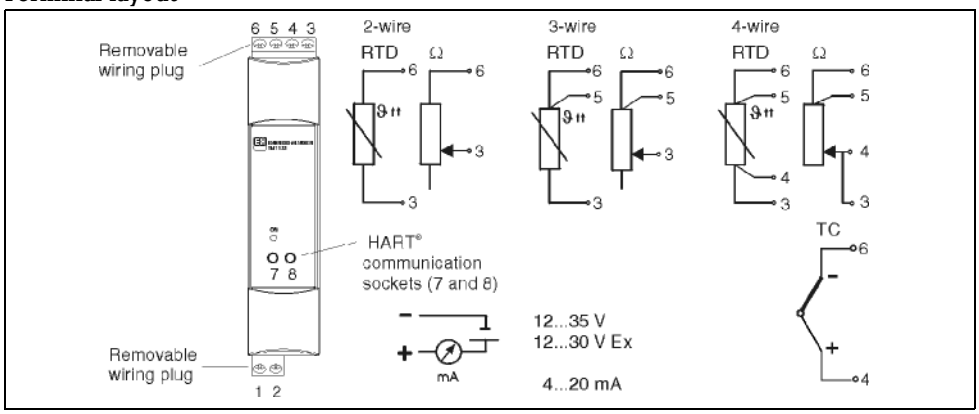


*fig. 5: DIN rail transmitter wiring*

## 4.2 Measurement unit connection

**Measurement unit connection**

Caution!
Switch off power supply before opening housing cover of the temperature sensor. Do not install or connect the unit to power supply before the sensor is connected to the transmitter. If this is not followed, parts of the electronic circuit will be damaged.

### 4.2.1 Sensors

Connect the sensor cables to the respective DIN rail transmitter terminals (Terminals 3 to 6) by following the wiring diagram (see fig. 5). Wiring plugs are removable for easy access.

### 4.2.2 Output signal and power supply

Connect the cable wires from the power supply to terminal 1 and 2 according to the wiring diagram (see fig. 5). For convenient installation, the connection is designed as a removable plug, so the connection can be made on the terminals, then plug in the connection socket to the transmitter housing.

Note!
The screws on the terminals must be screwed in tightly.

### 4.2.3 HART® connection

Connection is made directly at the communication socket 7 and 8 at the front wall of the transmitter. The sockets are inside the loop to a power supply or barrier. In order to connect the transmitter in a hazardous area, please read the separate Ex documentation.

Note!
The measurement circuit must have a load of at least 250 Ω. If using the E+H power supplies RNS 221 and RN 221N, this resistance is already installed in the unit and is therefore not required externally (see fig. 6, and see fig. 7)!

**Connection of a HART® hand operated module DXR 275/375**

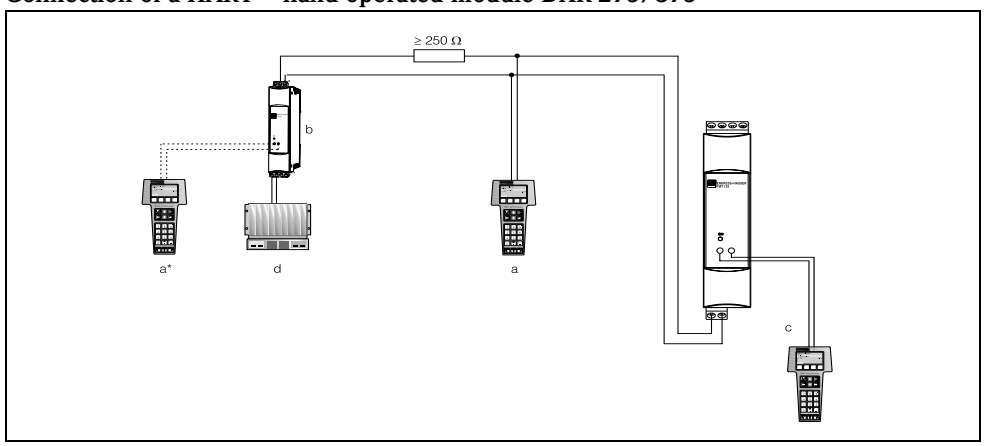


*fig. 6: Electrical connection of the HART® operated module*
*a = HART® module, a* = HART® module connected to the communication sockets of a power supply, b = Loop power supply (e.g. RNS 221 power supply or RN 221N active barrier), c = HART® module connected directly to the transmitter, d = PLC with passive input*

**Connection of Commubox FXA 191**

✎ Note!
Set the Commubox DIP switch to 'HART®'!

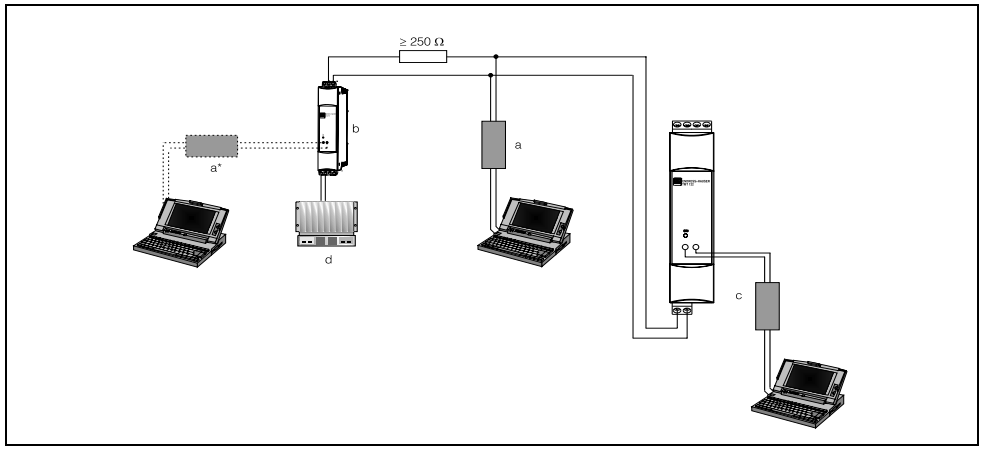


*fig. 7: Electrical connection of the Commubox FXA 191*
*a = Commubox FXA 191 (in combination with a PC - E+H operating software 'Commuwin II'),*
*a* = Commubox FXA 191 connected to the communication sockets of a power supply unit,*
*b = Loop power supply (e.g. RNS 221 power supply or RN 221N active barrier), c = Commubox FXA 191 connected directly to the transmitter, d = PLC with a passive input*

## 4.3 Potential grounding

✎ Note!
Please take note of the following when installing the transmitter. The shield on the 4 to 20 mA signal output must have the same potential as the shield at the sensor connections.
In plants with strong electromagnetic fields, shielding of all cables with a low ohm connection to ground is recommended.
It is recommended that shielded cable be used in installations outside buildings, due to the danger of lightning strikes.

## 4.4 Ground the Transmitter

The transmitter will operate with the current signal loop either floating or grounded. However, the extra noise in floating systems affects many types of readout devices. If the signal appears noisy or erratic, grounding the current signal loop at a single point may solve the problem. The best place to ground the loop is at the negative terminal of the power supply. Do not ground the current signal loop at more than one point. The transmitter is galvanically isolated to 2 kV AC (from the sensor input to the output), so the input circuit may also be grounded at any single point. When using a grounded thermocouple, the grounded junction serves as this point.

# 5 Operation

## 5.1 Communication

The temperature DIN rail transmitter is set up using the HART® protocol. The values measured can also be read using the HART® protocol. In order to do this the user has two possibilities:

- Operation using a universal hand operated module "HART® Communicator DXR 275/375".
- Operation using a PC and operating software (e.g. Commuwin II) as well as a HART® modem (e.g. "Commubox FXA 191").

### 5.1.1 HART® Communicator DXR 275/375

Selection of the unit functions using the "HART® Communicator" is done using various menu levels as well as with the help of a special HART® function matrix (see page 18).

✎ Note!

- When using the HART® hand unit all parameters can be read out, however, programming is locked. It is possible to access the HART® function matrix by entering 281 in the LOCK function. This condition remains even after a power failure. The HART® function matrix can be locked again by entering the personal code number.
- More detailed information on the HART® hand operation module can be found in the respective operating manual in the carrying case.

### 5.1.2 COMMUWIN II-operating program

Commuwin II is a universal program for remote operation of field and panel-mounted instrumentation. Application of the Commuwin II operating program is possible independent of the type of unit and communication mode (HART® or PROFIBUS®).
Commuwin II offers the following functions:
- Setting up unit functions
- Visualization of measured values
- Data security of unit parameters
- Unit diagnostics
- Measurement point documentation

✎ Note!
More detailed information on Commuwin II can be found in the E+H documentation:
- System Information: SI 018F/00/en “Commuwin II”
- Operating manual: BA 124F/00/en “Commuwin II” operating program

More details see:
**www.us.endress.com**

# 6 Commissioning

## 6.1 Installation and function check

**Installation check**

Monitor all connections making sure they are tight. In order to guarantee fault-free operation, the terminal screws must be screwed tightly onto the connection cables.

**Function check**

Measuring the analog 4 to 20 mA output signal or following failure signals:

| | |
|---|---|
| Measurement range under-cut | linear fall to 3.8 mA |
| Measurement range excess | linear rise to 20.5 mA |
| Sensor break; sensor short circuit[a] | ≤ 3.6 mA or ≥ 21.0 mA |

a. not for thermocouples

## 6.2 Commissioning

**Commissioning**

Once the power supply has been connected, the DIN rail transmitter is operational.



Note!
If there are any communication faults in the Microsoft® Windows NT® Version 4.0, Windows® 2000, or Windows® XP operating system, please follow these instructions:
Switch of the 'FIFO active' setting.

In order to do this proceed as follows:

- Windows NT® Version 4.0:
  Using the menu 'START' 'SETTINGS' 'SYSTEM CONTROL' 'CONNECTIONS' select the menu point 'COM-Port'. Switch off the 'FIFO active' command off using the menu path 'SETTINGS' 'EXPANDED'.
- Windows® 2000:
  Select 'Advanced settings for COM1' from the 'START' → 'SETTINGS' → 'SYSTEM CONTROL' → 'SYSTEM' → 'HARDWARE' → 'DEVICE MANAGER' → 'CONNECTIONS (COM and LPT)' → 'COMMUNICATION CONNECTION (COM1) → 'CONNECTION SETTINGS' → 'ADVANCED' menu. Deactivate "Use FIFO buffer".
- Windows® XP:
  Select "Port settings" from connections Port (Com 1) → 'START' → 'SETTING' → 'SYSTEM' → 'HARDWARE' → 'DEVICE MANAGER' →'PORTS (COM and LPT)' → 'COMMUNICATION PORT (COM1) → 'PORT SETTING' → 'ADVANCED' menu. Deactivate "Use FIFO buffer".

### 6.2.1 Quick Setup

Using the Quick Setup, the operator is led through all the most important unit functions that must be set up for standard measurement operation of the unit.
Using the HART® hand module a quick setup of the black highlighted fields of the HART® function matrix (see fig. 9) is possible. Using the Commuwin II operating matrix (see fig. 10) a quick setup is possible with the following fields:

- Type of sensor (V2H0)
- Unit meas. value (V2H2)
- Value for 4 mA (V2H4)
- Value for 20 mA (V2H5)
- Connection (V2H6)

### 6.2.2 Configuration with HART® protocol and DXR 275/375 hand operated module

Note!
Selection of all DIN rail transmitter functions using the HART® hand module is done with various menu levels with the help of the E+H function matrix (see fig. 9). All transmitter functions are described in 6.2.5 "Description of unit functions".

**What needs to be done:**

1. Switch on hand module:
   – Measurement unit is not yet connected. The HART® main menu appears. This menu level appears for all HART® programming independent of the type of instrumentation. Information on off-line programming can be found in the "Communicator DXR 275/375" operating manual.
   – Measuring unit is connected. The menu level "Online" appears. In this "Online" menu level the actual measured data such as measured value (PV) and output current (AO) are continuously displayed. Entry into the transmitter operating matrix is done using the line "Matrix Parameter". This matrix systematically contains all HART® accessible functions.
2. Using "Matrix Parameter" the function group can be selected (e.g. basic calibration) and then followed by the required function, e.g. "Sensor input".
3. Enter numeric values or change settings. Then acknowledge using the F4 "Entry" function key.
4. "SEND" appears when operating the F2 function key. Once the F2 key has been pressed all values entered in the hand module are transmitted to the transmitter measurement system.
5. A return to the "Online" menu level is made using the F3 "HOME" function key. Here, the actual transmitter values measured with the new settings can be read.

Note!
- When using the HART® hand unit all parameters can be read out, however, programming is blocked. It is possible to access the HART® function matrix by entering 281 in the LOCK function. This condition remains even after a power failure. The HART® function matrix can be locked again by entering the personal code number.
- More detailed information on the HART® hand operated module can be found in the respective operating manual in the carrying case.

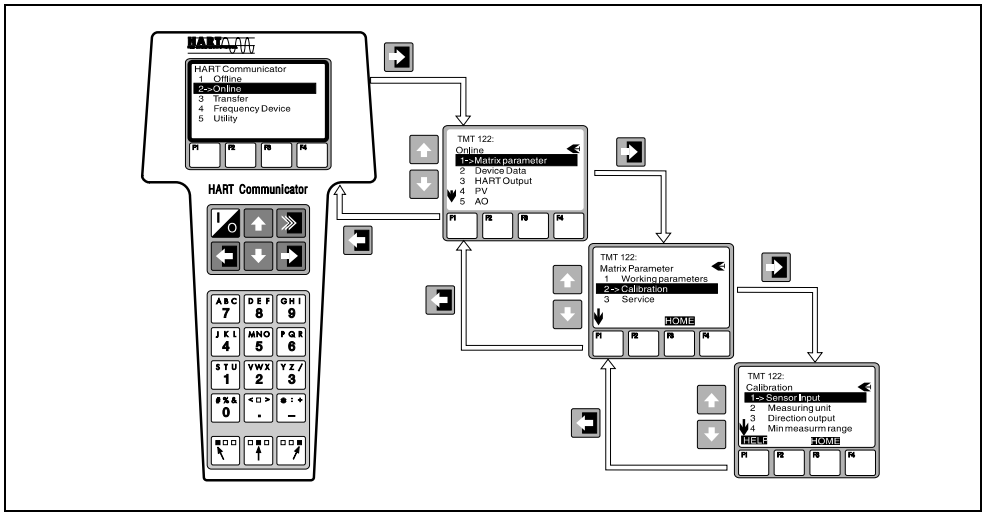


*fig. 8: Configuration of hand module example, "Sensor input"*

**HART® function matrix**

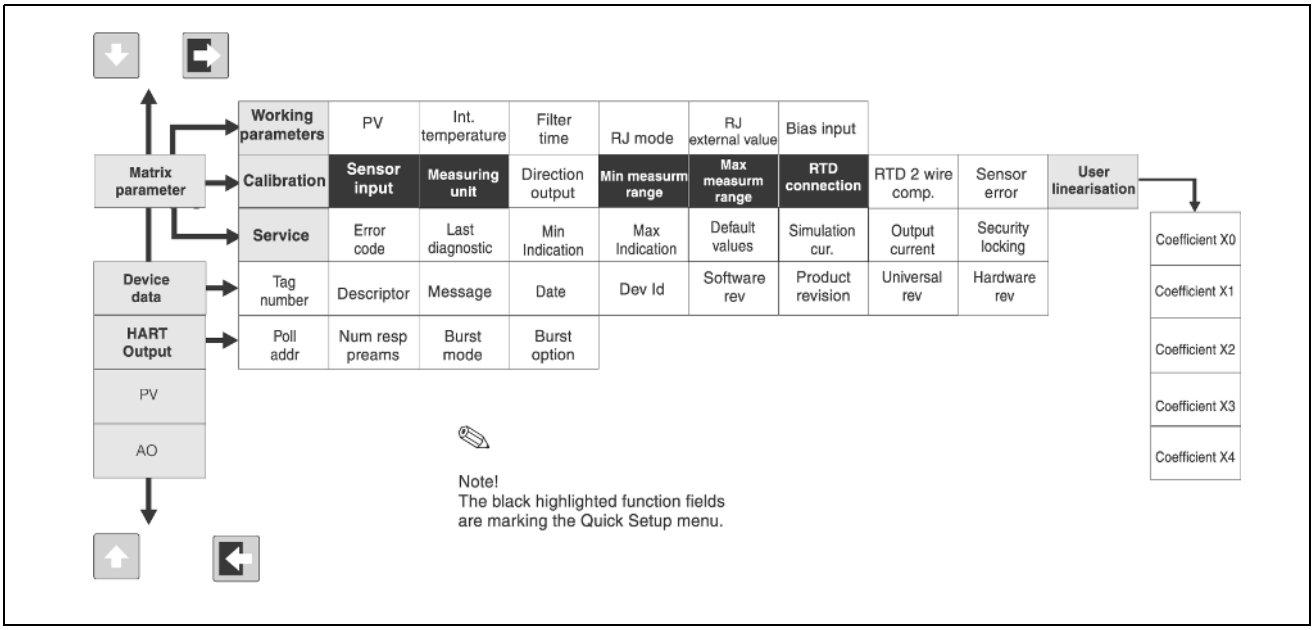


*fig. 9: HART® function matrix*

## 6.2.3 Configuration with HART® protocol and COMMUWIN II

Commuwin II is a universal program for remote operation of field and panel-mounted instrumentation. Application of the Commuwin II operating program is possible independent of the type of unit and communication mode (HART® or PROFIBUS®). Commuwin II offers the following functions:

- Setting up unit functions
- Display
- Data security of unit parameters
- Unit diagnostics
- Measurement point documentation

Note!
More detailed information on Commuwin II can be found in the E+H documentation:

- System Information: SI 018F/00/en "Commuwin II"
- Operating manual: BA 124F/00/en "Commuwin II" operating program

More details see:
**www.us.endress.com**

**Commuwin II operating matrix**

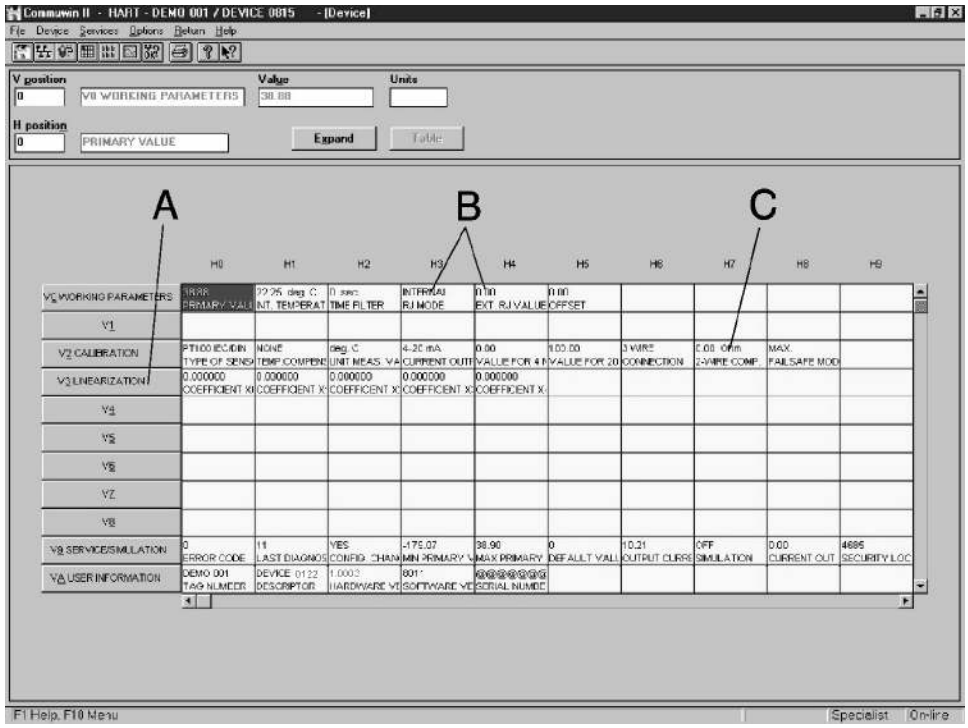


*fig. 10: Commuwin II operating matrix:*
*A = Unit functions active only on customer specific linearization*
*B = Unit functions active only on TC connection*
*C = Unit functions active only on RTD 2 wire connection*

### 6.2.4 Configuration using HART® protocol and PC configuration software ReadWin® 2000

The configuration of the transmitter can be done using both the HART® protocol and the ReadWin® 2000 configuration software. The following table shows the structure of the interactive menu led operation of READWIN® 2000.

| Configurable parameters (Unit function description see "Description of unit functions" on page 21) | |
|---|---|
| **Standard settings** | – Type of sensor<br>– Connection mode (2-,3-, or 4-wire connection on RTD)<br>– Units (°C, °F or K)<br>– Measurement range start value<br>– Measurement range end value<br>– Coefficient X0 to X4 (on sensor type polynom RTD/TC)<br>– Temp.-compensation (on sensor type polynom TC) |
| **Expanded settings** | – Cold junction compensation internal/external (on TC)<br>– Temperature external (on TC with cold junction compensation external)<br>– Cable resistance compensation (on RTD 2-wire connection)<br>– Fault condition reaction<br>– Output (4 to 20 mA/20 to 4 mA)<br>– Damping (filter)<br>– Offset<br>– TAG (Measurement point description)<br>– Identifier (Descriptor) |
| **Service functions** | – Simulation (on/off)<br>– Reset/factory default<br>– Series number (only display)<br>– Operation code (=release code 281) |

For detailed ReadWin® 2000 operating instructions, please read the on-line documentation contained in the ReadWin® 2000 software. ReadWin® 2000 can be downloaded free of charge from the Internet at the following address:
■ www.readwin2000.com

**Customer-specific linearization**
Customer-specific linearization and sensor matching are activated after the **POLYNOM RTD** sensor type is selected. Pressing the "**LINEARIZATION**" key starts the **SMC 32** module. The sensor's support points and temperature deviation are entered in the **SMC 32**. Pressing the "**CALCULATE**" key calculates the linearization and "**OK**" adopts it into ReadWin® 2000.
Linearization coefficients X0 to X4 are entered into the COMMUWIN II operating matrix or in the DXR 275/375 HART® handheld terminal.

### 6.2.5 Description of unit functions

The following table contains a listing and description of all unit functions of the HART® protocol that can be used for setting up the temperature DIN rail transmitter.

✎ Note!
**Factory default values are shown in bold text.**
The HART® operating module (DXR275/375) display is indicated by the following symbol .

| Function group: WORKING PARAMETERS | |
|---|---|
| **Primary value**<br>▪ V0H0<br>▪ (PV) | Display of actual measured temperature.<br>Display: 7-digit number with floating decimal point and engineering unit.<br>(e.g. 199.98 Ohm; -62.36 °C, 407.76 °F) |
| **Int: temperature**<br>▪ V0H1 | Display of the actual measured temperature of the internal comparison measurement point.<br>✎ Note!<br>Display: 7-digit number with floating decimal point and engineering unit. (e.g. 23.70 °C, 71.04 °F)[a] |
| **Time filter**<br>▪ V0H2 | Digital filter selection 1st grade.<br>Input: 0 to 100 seconds<br>**0 sec.** |
| **RJ Mode**<br>▪ V0H3 | Selection of internal (Pt100) or external (32 to 176 °F/0 to 80 °C) cold junction compensation.<br>Entry: internal; external<br>**internal**<br>✎ Note!<br>Entry only possible on selection of thermocouple (TC) in unit function SENSOR TYPE.[1] |
| **Ext. RJ Value**<br>▪ V0H4 | Entry of external cold junction value.<br>Entry: -40.00 to 185.00 °F (-40.00 to 85.00 °C) (°C, °F, K)<br>**0 °C**<br>✎ Note!<br>Entry only possible on selection of an external cold junction compensation in unit function RJ MODE. |
| **OFFSET**<br>▪ V0H5 | Entry of zero point correction (Offset).<br>Entry: -18.00 to 18.00 °F (10.00 to 10.00 °C) (°C, °F, K)<br>**0.00 °C**<br>✎ Note!<br>Entry returns to factory default values when changing sensor type! |

a. Only for Commuwin II operating matrix

| Function group: BASIC CALIBRATION | |
|---|---|
| **Type of sensor**<br>■ V2H0 | Entry of sensor used:<br>**Sensor type / Range start / Range end value**<br>-10..75 mV / -10 mV / 75 mV<br>10..400 Ohm / 10 Ω / 400 Ω<br>10..2000 Ohm / 10 Ω / 2000 Ω<br>Pt100 DIN / -200 °C (-328 °F) / 850 °C (1562 °F)<br>Pt100 JIS / -200 °C (-328 °F) / 649 °C (482 °F)<br>Pt500 / -200 °C (-328 °F) / 250 °C (482 °F)<br>Pt1000 / -200 °C (-328 °F) / 250 °C (482 °F)<br>Ni100 / -60 °C (-76 °F) / 180 °C (356 °F)<br>Ni500 / -60 °C (-76 °F / 150 °C (302 °F)<br>Ni1000 / -60 °C (-76 °F / 150 °C (302 °F)<br>Polynom RTD / -270 °C (-454 °F) / 2500 °C (4532 °F)<br>Type B / 0 °C (32 °F) / 1820 °C (3308 °F)<br>Type C / 0 °C (32 °F) / 2320 °C (4208 °F)<br>Type D / 0 °C (32 °F) / 2495 °C (4523 °F)<br>Type E / -270 °C (-454 °F) / 1000 °C (1832 °F)<br>Type J / -210 °C (-346 °F) / 1200 °C (2192 °F)<br>Type K / -270 °C (-454 °F) / 1372 °C (2501 °F)<br>Type L / -200 °C (-328 °F) / 900 °C (1652 °F)<br>Type N / -270 °C (-454 °F) / 1300 °C (2372 °F)<br>Type R / -50 °C (-58 °F) / 1768 °C (3214 °F)<br>Type S / -50 °C (-58 °F) / 1768 °C (3214 °F)<br>Type T / -270 °C (-454 °F) / 400 °C (752 °F)<br>Type U / -200 °C (-328 °F) / 600 °C (1112 °F)<br>**Pt100 DIN** |
| **Unit meas. value**<br>■ V2H2 | Enter engineering units.<br>Entry: °C<br>°F<br>K<br>**°C** |
| **Current output**<br>■ V2H3 | Enter standard (4 to 20 mA) or inverse (20 to 4 mA) current output signal.<br>Entry: 4 to 20 mA<br>20 to 4 mA<br>**4 to 20 mA** |
| **Value for 4 mA**<br>■ V2H4 | Entry: For limits see unit function SENSOR TYPE.<br>**0 °C** |
| **Value for 20 mA**<br>■ V2H5 | Entry: For limits see unit function SENSOR TYPE.<br>**100 °C** |
| **Connection**<br>■ V2H6<br>■ RTD connection | Entry of RTD connection mode<br>Entry: 2 wire<br>3 wire<br>4 wire<br>**3 wire**<br>✎ Note!<br>Function field is only active on selection of resistance thermometer (RTD) in the unit function SENSOR TYPE (V2H0)[a]. |

a. Only for Commuwin II operation matrix

| | |
|---|---|
| **2 wire comp.**<br>■ V2H7 | Entry of cable compensation on RTD 2 wire connection.<br>Entry: 0.00 to 30.00 Ohm<br>**0.00 Ohm**<br><br>✎ Note!<br>Function field is only active on selection of 2 wire cable connection in unit function CONNECTION TYPE (V2H6)[a]. |
| **Failsafe mode**<br>■ V2H8 | Entry of failure signal on sensor open or short circuit.[b]<br>Entry: max (≥ 21.0 mA)<br>min (≤ 3.6 mA)<br>**max** |
| **Function group: LINEARIZATION**<br><br>**USER linearization**<br>The following function fields are only active in the unit function SENSORTYPE (V2H0) on selection of customer-specific linearization (polynome RTD or polynome TC).[1] | |
| **Coefficient X0**<br>■ V3H0 | Input of first coefficient for customer-specific linearization (polynome 4th grade with five coefficients), see chapter 6.2.4 |
| **Coefficient X1**<br>■ V3H1 | Input COEFFICIENT X1, see chapter 6.2.4. |
| **Coefficient X2**<br>■ V3H2 | Input COEFFICIENT X2, see chapter 6.2.4. |
| **Coefficient X3**<br>■ V3H3 | Input COEFFICIENT X3, see chapter 6.2.4. |
| **Coefficient X4**<br>■ V3H4 | Input COEFFICIENT X4, see chapter 6.2.4. |
| **Function group: SERVICE** | |
| **Error code**<br>■ V9H0 | Display of actual error code.<br>Display: See “Application fault messages” on page 26.<br>**0** |
| **Last diagnostic**<br>■ V9H1 | Display of previous error code.<br>Display: See “Application fault messages” on page 26.<br>**0** |
| **Config. changed**<br>■ V9H2 | Parameter changes are done.<br>Display: Yes/No<br>**No** |
| **Min primary value**<br>■ V9H3 | Display the minimum process value. The process value is accepted at the beginning of the measurement.<br><br>✎ Note!<br>Min. process value will be changed to the actual process value on access. On reset to factory default, the default value is entered.<br><br>**+10000** |

a. Only for Commuwin II operation matrix
b. Not for thermocouples (TC)

| | |
|---|---|
| **Max primary value**<br>■ V9H4 | Display the maximum process value. The process value is accepted at the beginning of the measurement.<br>✎ Note!<br>Max. process value will be changed to the actual process value on access. On reset to factory default, the default value is entered.<br>**-10000** |
| **Default values**<br>■ V9H5 | Entry: 182 (Reset to factory default settings)<br>**0** |
| **Output current**<br>■ V9H6 | Display of the actual output current signal. |
| **Simulation**<br>■ V9H7 | Entry of simulation mode.<br>Entry: Off<br>On<br>**Off** |
| **Current out (sim)**<br>■ V9H8 | Entry of simulation value (current).<br>Entry: 3.58 to 21.7 mA |
| **Security locking**<br>■ V9H9 | Release code for setting up.<br>Entry: Lock = 0<br>Release = 281<br>**281** |
| **Function group: USER INFORMATION** | |
| **Tag number**<br>■ VAH0 | Entry and display of measurement point description (TAG).<br>Entry: 8 characters<br>- |
| **Descriptor**<br>■ VAH1 | Entry and display of plant description.<br>Entry: 16 characters<br>- |
| **Hardware Version**<br>■ VAH2 | Display of unit version,<br>**e.g.: 1.0000 indicates version 1.00.00.** |
| **Software Version**<br>■ VAH3<br>■ Software Rev. | Display of software version,<br>**e.g.:**<br>**8010 indicates version 1.0**<br>**8011 indicates version 1.1** |
| **Serial number**<br>■ VAH4 | 8-digit display of E+H device serial numbers (see legend plates on the device). |

### 6.2.6 Supported HART® commands

| No. | Description | Access |
|---|---|---|
| | **Universal Commands** | |
| 00 | Read unique identifier | r |
| 01 | Read primary variable | r |
| 02 | Read p.v. current and percent of range | r |
| 03 | Read dynamic variables and p.v. current | r |
| 06 | Write polling address | w |
| 11 | Read unique identifier associated with tag | r |
| 12 | Read message | r |
| 13 | Read tag, descriptor, date | r |
| 14 | Read primary variable sensor information | r |
| 15 | Read primary variable output information | r |
| 16 | Read final assembly number | r |
| 17 | Write message | w |
| 18 | Write tag, descriptor, date | w |
| 19 | Write final assembly number | w |
| | **Common practice** | |
| 34 | Write primary variable damping value | w |
| 35 | Write primary variable range values | w |
| 38 | Reset configuration changed flag | w |
| 40 | Enter/Exit fixed primary varaible current mode | w |
| 42 | Perform master reset | w |
| 44 | Write primary variable units | w |
| 48 | Read additional transmitter status | r |
| 59 | Write number of response preambles | w |
| 108 | Write burst mode command number | w |
| 109 | Burst mode control | w |
| | **E+H specific** | |
| 144 | Read matrix parameter | r |
| 145 | Write matrix parameter | w |
| 148 | Upload | r |
| 149 | Download | w |

# 7 Maintenance

**Maintenance**

The TMT 122 temperature DIN rail transmitter has no moving parts and requires minimal scheduled maintenance.

**Sensor Checkout**
To determine whether the sensor is at fault, replace it with another sensor or connect a test sensor locally at the transmitter to test remote sensor wiring. Select any standard, off-the-shelf sensor for use with a TMT122 temperature transmitter, or consult the factory for a replacement special sensor or transmitter combination.

# 8 Accessories

**Accessories**

Commubox FXA 191, PC-Software Commuwin II and ReadWin® 2000, DIN rail clip according to IEC 60715 for E+H temperature DIN rail transmitters

ReadWin® 2000 can be downloaded free of charge from the internet from the following address:
**www.readwin2000.com**

Please contact your supplier when ordering!

# 9 Trouble-shooting

## 9.1 Trouble-shooting instructions

If faults occur after commissioning or during measurement, always start any trouble-shooting sequence using the following check. The user is led towards the possible fault cause and its rectification via question and answer.

## 9.2 Application fault messages

**Application fault messages**

Application fault messages are shown in the display of the HART® hand operating module "DXR 275/375" once the menu point "ERROR CODE" has been selected or in the PC operating surface of Commuwin II (V9H0 - ERROR CODE).

| Fault code | Cause | Action/cure |
|---|---|---|
| **0** | No fault, Warning | None |
| **10** | Hardware fault (unit defective) | Replace DIN rail transmitter |
| **11** | Sensor short circuit | Check sensor |
| **12** | Sensor cable open circuit | Check sensor |
| **13** | Reference measurement point defective | None |
| **14** | Unit not calibrated | Return DIN rail transmitter to manufacturer |

| Fault code | Cause | Action/cure |
|---|---|---|
| **106** | Up-/Download active | None (will be automatically acknowledged) |
| **201** | Warning: Measured value too small | Enter other values for measured value range start |
| **202** | Warning: Measured value too large | Enter other values for measured value range end |
| **203** | Unit is reset (to factory default settings) | None |

## 9.3 Application faults without messages

**Application fault without messages**

### General application faults

| Fault | Cause | Action/cure |
|---|---|---|
| No communication | No power supply on 2 wire circuit | Check current loop |
| | Power supply too low (<10 V) | Connect cables correctly to terminal plan (polarity) |
| | Defective interface cable | Check interface cable |
| | Defective interface | Check PC interface |
| | Defective DIN rail transmitter | Replace DIN rail transmitter |

### Application faults for RTD connection (Pt100/Pt500/Pt1000/Ni100)

| Fault | Cause | Action/cure |
|---|---|---|
| Fault current (≤ 3.6 mA or ≥ 21 mA) | Defective sensor | Check sensor |
| | Incorrect RTD connection | Reconnect cables correctly (connection diagram) |
| | Incorrect 2 wire connection | Connect cables correctly to terminal plan (polarity) |
| | Transmitter programming faulty (wire number) | Change parameter 'CONNECTION' (See "Description of unit functions" on page 21.) |
| | Programming | Thermocouple set up (see chapter 6.2.5); change to RTD |
| | Defective DIN rail transmitter | Replace DIN rail transmitter |
| Measured value incorrect/inaccurate | Faulty sensor installation | Install sensor correctly |
| | Heat conducted via sensor | Take note of sensor installation length |
| | Transmitter programming faulty (wire number) | Change parameter 'Connection type' |
| | Transmitter programming faulty (scale) | Change scale |
| | Wrong RTD used | Change parameter 'Sensor type' |
| | Sensor connection (2 wire) | Check sensor connections |
| | Sensor cable (2 wire) not compensated | Compensate cable resistance |
| | Offset incorrectly set | Check offset |

**Application faults for TC connection**

| Fault | Cause | Action/cure |
|---|---|---|
| Fault current (≤ 3.6 mA or ≥ 21 mA) | Sensor incorrectly connected | Connect sensor correctly to terminal plan (polarity) |
| | Defective sensor | Replace sensor |
| | Programming | Sensor type 'RTD' setup; set up correct thermocouple |
| | Incorrect 2 wire connection (current loop) | Connect the cables correctly (see connection diagram) |
| | Defective DIN rail transmitter | Replace DIN rail transmitter |
| Measured value incorrect/inaccurate | Faulty sensor installation | Install sensor correctly |
| | Heat conducted via sensor | Take note of sensor installation length |
| | Transmitter programming faulty (scale) | Change scale |
| | Incorrect thermocouple setup | Change parameter 'Sensor type' |
| | Incorrect cold junction setup | See chapter 'Operation' and 'Technical data' |
| | Offset incorrectly set up | Check offset |
| | Fault on the thermowell welded thermo wire (coupling of interference voltages) | Use sensor where the thermo wire is not welded |

## 9.4 Returns

**Returns**

Please follow the return Authorization Policy at the end of these instructions.

## 9.5 Disposal

**Disposal**

Due to its construction, the DIN rail transmitter cannot be repaired. When disposing of the DIN rail transmitter please take note of the local disposal regulations.

## 9.6 Software history

| Software version / date | Changes to software | Changes to documentation |
|---|---|---|
| V 1.1 / 12.2001 | Original software<br><br>compatible with:<br>■ HART® Communicator DXR 275/375 (from OS 4.6) with Dev-Rev 2, DDRev 1<br>■ Readwin® 2000<br>■ Commuwin II (version 2.07.01-4 and higher<br>■ AMS (version 5.X and higher)<br>■ PDM (version 5.2 and higher) | |

# 10 Technical Data

## 10.1 Function and system design

**Measuring principle**

Electronic monitoring and conversion of input signals in industrial temperature measurement.

**Measuring system**

The iTEMP® HART® DIN rail TMT 122 temperature DIN rail transmitter is a two wire transmitter with an analog output. It has measurement input for resistance thermometers (RTD) in 2-, 3- or 4-wire connection, thermocouples and voltage transmitters. Setup of the TMT 122 is done using the HART® -Protocol with hand operating module (DXR 275/375) or PC (COMMUWIN II or Read-Win® 2000 operating software).

## 10.2 Input

**Measured variable**

Temperature (temperature linear transmission behavior), resistance and voltage

**Measuring range**

The transmitter monitors different measuring ranges depending on the sensor connection and input signals.

### Type of input

| Input | Designation | Measuring range limits | Min. span |
|---|---|---|---|
| **Resistance thermometer (RTD)** | | | |
| to IEC 751 | Pt100 | -328 to 1562 °F (-200 to 850 °C) | 18 °F (10 °C) |
| ($\alpha$ = 0.00385) | Pt500 | -328 to 482 °F (-200 to 250 °C) | 18 °F (10 °C) |
| | Pt1000 | -328 to 482 °F (-200 to 250 °C) | 18 °F (10 °C) |
| to DIN 43760 | | | |
| ($\alpha$ = 0.006180) | Ni100 | -76 to 482 °F (-60 to 250 °C) | 18 °F (10 °C) |
| | Ni500 | -76 to 302 °F (-60 to 150 °C) | 18 °F (10 °C) |
| | Ni1000 | -76 to 302 °F (-60 to 150 °C) | 18 °F (10 °C) |
| | ■ Connection type: 2-, 3- or 4-wire connection<br>■ Software compensation of cable resistance possible in the 2 wire system (0 to 30 Ω)<br>■ Sensor cable resistance max. 20 Ω per cable in the 3 and 4 wire system<br>■ Sensor current: ≤ 0.2 mA | | |
| **Resistance transmitter** | Resistance Ω | 10 to 400 Ω<br>10 to 2000 Ω | 10 Ω<br>100 Ω |
| **Thermocouples (TC)** | Type B (PtRh30-PtRh6)[a] | 32 to 3308 °F (0 to +1820 °C) | 900 °F (500 °C) |
| to NIST Monograph 175, | Type E (NiCr-CuNi) | -454 to 1832 °F (-270 to +1000 °C) | 90 °F (50 °C) |
| IEC 584 | Type J (Fe-CuNi) | -346 to 2192 °F (-210 to +1200 °C) | 90 °F (50 °C) |
| | Type K (NiCr-Ni) | -454 to 2501 °F (-270 to +1372 °C) | 90 °F (50 °C) |
| | Type N (NiCrSi-NiSi) | -454 to 2372 °F (-270 to +1300 °C) | 90 °F (50 °C) |
| | Type R (PtRh13-Pt) | -58 to 3214 °F (-50 to +1768 °C) | 900 °F (500 °C) |
| | Type S (PtRh10-Pt) | -58 to 3214 °F (-50 to +1768 °C) | 900 °F (500 °C) |
| | Type T (Cu-CuNi) | -454 to 752 °F (-270 to +400 °C) | 90 °F (50 °C) |
| to ASTM E988 | Type C (W5Re-W26Re) | 32 to 4208 °F (0 to +2320 °C) | 900 °F (500 °C) |
| | Type D (W3Re-W25Re) | 32 to 4523 °F (0 to +2495 °C) | 900 °F (500 °C) |
| to DIN 43710 | Type L (Fe-CuNi) | -328 to 1652 °F (-200 to +900 °C) | 90 °F (50 °C) |
| | Type U (Cu-CuNi) | -328 to 1112 °F (-200 to +600 °C) | 90 °F (50 °C) |
| | ■ Internal cold junction (Pt100)<br>■ Accuracy of cold junction: ± 1.8 °F (1 °C) | | |
| **Voltage transmitter (mV)** | Millivolt transmitter (mV) | -10 to 75 mV | 5 mV |

a.High measuring error increase for temperature lower than 572 °F (300 °C)

## 10.3 Output

**Output signal**

Analog 4 to 20 mA, 20 to 4 mA

**Breakdown information**

**Breakdown information to NAMUR NE 43**

Breakdown information is created when the measuring information is invalid or not present anymore and gives a complete listing of all errors occuring in the measuring system.

| | | Signal (mA) |
|---|---|---|
| Under ranging | Standard | 3.8 |
| Over ranging | Standard | 20.5 |
| Sensor break; sensor short circuit low | To NAMUR NE 43 | ≤ 3.6 |
| Sensor break; sensor short circuit high | To NAMUR NE 43 | ≥ 21.5 |

**Source impedance**

max. ($V_{Power\ supply}$ – 12 V) / 0.022 A (current output)
e.g. (24 V–12 V)/0.022 A = 545.5 Ω

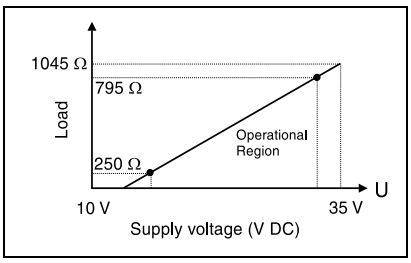


**Transmission behavior** Temperature linear, resistance linear, voltage linear

**Filter** 1st order digital filter: 0 to 100 s

**Galvanic isolation** U = 2 kV AC (input/output)

**Input current required** ≤ 3.5 mA

**Current limit** ≤ 23 mA

**Switch on delay** 4 s (during power up $I_a$ ≤ 3.8 mA)

## 10.4 Power supply

**Electrical connection** See "Overview" on page 12.

**Supply voltage** $U_b$ = 12 to 35 V, polarity protected (For hazardous location please see control drawing)

**Residual ripple** Allowable ripple $U_{ss}$ ≤ 3 V at $U_b$ ≥ 13 V, $f_{max.}$ = 1 kHz

## 10.5 Performance characteristics

**Response time** 1 s

**Reference operating conditions** Calibration temperature: 73.4 °F ± 9 °F (+23 °C ± 5 °C)

**Maximum measured error**

| | Type | Measurement accuracy[1] |
|---|---|---|
| **Resistance thermometer RTD** | Pt100, Ni100<br>Pt500, Ni500<br>Pt1000, Ni1000 | 0.36 °F (0.2 °C) or 0.08%<br>0.9 °F (0.5 °C) or 0.20%<br>0.54 °F (0.3 °C) or 0.12% |
| **Thermocouple TC** | K, J, T, E, L, U<br>N, C, D<br>S, B, R | typ. 0.9 °F (0.5 °C) or 0.08%<br>typ. 1.8 °F (1.0 °C) or 0.08%<br>typ. 3.6 °F (2.0 °C) or 0.08% |

| | Measurement range | Measurement accuracy[a] |
|---|---|---|
| **Resistance transmitter (Ω)** | 10 to 400 Ω<br>10 to 2000 Ω | ± 0.1 Ω or 0.08%<br>± 1.5 Ω or 0.12% |
| **Voltage transmitters (mV)** | -10 to 75 mV | ± 20 µV or 0.08% |

a.% is related to the adjusted measurement range. The value to be applied is the greater.

**Influence of supply voltage**

≤ ±0.01%/V deviation from 24 V
Percentages refer to the full scale value.

**Influence of ambient temperature (Temperature drift)**

- Resistance thermometer (RTD):
  $T_d$= ±(8.3 ppm/°F * max. span + 27.8 ppm/°F * calibrated span) * Δ ϑ
  $T_d$= ±(15 ppm/K * max. span + 50 ppm/K * calibrated span) * Δ ϑ
- Resistance thermometer Pt100:
  $T_d$= ±(8.3 ppm/°F * (full scale point or 20 mA temperature + 328) + 27.8 ppm/°F * span) * Δ ϑ
  $T_d$= ±(15 ppm/K * (full scale point or 20 mA temperature + 200) + 50 ppm/K * span) * Δ ϑ
- Thermocouple (TC):
  $T_d$= ±(27.8 ppm/°F * max. span + 27.8 ppm/°F * calibrated span) * Δ ϑ
  $T_d$= ±(50 ppm/K * max. span + 50 ppm/K * calibrated span) * Δ ϑ

| | |
|---|---|
| Δ ϑ | Deviation of the ambient temperature according to the reference condition (73.4 °F ± 9 °F) (+23 °C ± 5 K). |
| **Calibrated span** | 100 °F if unit calibrated from 50 °F to 150 °F. |
| **max. span** | Pt100 would be 1890 °F (1050 °C). |
| **Full scale point or 20 mA temperature** | 150 °F if unit calibrated from 50 °F to 150 °F. |

**Influence of load**

± 0.02%/100 Ω
Values refer to the full scale value

**Long-term stability**

≤ 0.18 °F/year (0.1 °C/year) or ≤ 0.05%/year
Values under reference operating conditions. % refer to the set span. The highest value is valid.

**Influence of cold junction**

Pt100 IEC 751 Cl. B (internal cold junction for thermocouples TC)

## 10.6 Installation conditions

**Installation instructions**

- Installation angle:
  no limit
- Installation area:
  Installation on DIN rail, e.g. in control panel

## 10.7 Environmental conditions

**Ambient temperature limits**
-40 to 185 °F (-40 to +85 °C) for Ex-area, see Ex-certification or control drawing

**Storage temperature**
-40 to 212 °F (-40 to +100 °C)

**Climate class**
as per IEC 60654-1, class C

**Condensation**
allowed

**Degree of protection**
NEMA 1 (IP 20)

**Shock and vibration resistance**
4g / 2 to 150 Hz as per IEC 60 068-2-6

**Electromagnetic compatibility (EMC)**

**CE Electromagnetic Compatibility Compliance**
The device meets all requirements listed under IEC 61326 Amendment 1, 1998 and NAMUR NE 21
This recommendation is a uniform and practical way of determining whether the devices used in laboratory and process control are immune to interference with an objective to increase its functional safety.

| | | | |
|---|---|---|---|
| Discharge of static electricity | IEC 61000-4-2 | 6 kV cont., 8 kV air | |
| Electromagnetic fields | IEC 61000-4-3 | 80 to 1000 Hz | 10 V/m |
| Burst (signal) | IEC 61000-4-4 | 1 kV 2 kV(B)[a] | |
| Transient voltage | IEC 61000-4-5 | 1 kV unsym. / 0.5 kV sym. | |
| HF coupling | IEC 61000-4-6 | 0.15 to 80 MHz | 10 V |
| Line interference | IEC 61000-4-16 | 10 kHz to 150 kHz | 10 V |

a. self recovery

## 10.8 Mechanical construction

**Design, dimensions**

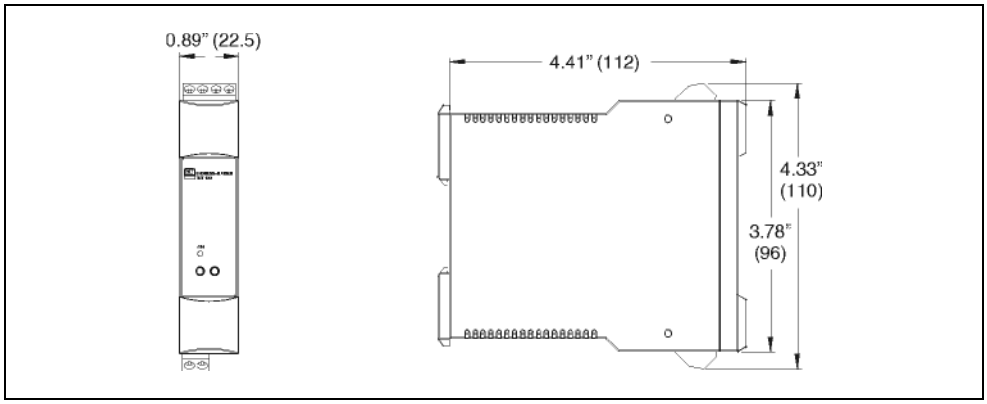


*fig. 11: Dimensions of the DIN rail transmitter in inches (mm)*

**Weight**
approx. 3.2 oz (90 g)

**Material**
- Housing:

| | |
|---|---|
| | Plastic PC/ABS, UL 94V0 |
| **Terminals** | Keyed plug-in screw terminals, core size max. 16 AWG solid, or strands with ferrules. |

## 10.9 Human interface

| | |
|---|---|
| **Display elements** | No display elements are present directly on the temperature transmitter.<br>The measured value display can be called up using the ReadWin® 2000 or COMMUWIN II PC software. |
| **Operating elements** | No operating elements are present directly on the transmitter to prevent manipulation. The device parameters of the temperature transmitter are configured using the DXR 275/375 handheld terminal or a PC with Commubox FXA 191 and operating software (e.g. COMMUWIN II or ReadWin® 2000) |
| **Remote operation** | **Configuration**<br>Handheld terminal DXR 275/375 or PC with Commubox FXA 191 and operating software (ReadWin® 2000 or COMMUWIN II).<br><br>**Interface**<br>PC interface RS232 and Commubox FXA 191.<br><br>**Configurable parameters**<br>Sensor type and connection type, engineering units (°C/°F), measurement range, internal/external cold junction, compensation of wire resistance with 2-wire connection, failure mode, output signal (4 to 20/20 to 4 mA), digital filter (damping), offset, TAG + descriptor (8 + 16 characters), output simulation, customer specific linearization, min./max. process value indicator function |

## 10.10 Certificates and approvals

| | |
|---|---|
| **CE-Mark** | The measurement system fulfills the requirements demanded by the EU regulations. Endress+Hauser acknowledges successful unit testing by adding the CE mark. |
| **Hazardous area approvals** | ■ FM IS, Class I, Div. 1+2, Group A, B, C, D / FM NI, Class I, Div. 2, Group A, B, C, D<br>■ CSA IS, Class I, Div. 1+2, Group A, B, C, D<br>■ ATEX II1G EEx ia IIC T4/T5/T6<br>■ ATEX II3G EEx nA IIC T4/T5/T6<br>■ ATEX II3D in compliance with EN 50281.1 |
| **GL** | Ship building approval (Germanischer Lloyd) |
| **UL** | Recognized component to UL 3111-1 |
| **Other standards and guidelines** | ■ IEC 60529:<br>Degrees of protection by housing (IP-Code)<br>■ IEC 61010:<br>Safety requirements for electrical measurement, control and laboratory instrumentation.<br>■ IEC 61326:<br>Electromagnetic compatibility (EMC requirements)<br>■ NAMUR<br>Standardization association for measurement and control in chemical and pharmaceutical industries. (www.namur.de)<br>■ NEMA<br>Standardization association for the electrical industry |

# Index


## C
CE-marks . . . . . 8
Commubox FXA 191 . . . . . 13
Commuwin II operating matrix . . . . . 19
Commuwin II operating program. . . . . 15
conformity description. . . . . 8
Customer-specific linearization . . . . . 20

## D
Dimensions. . . . . 9

## F
Fault code. . . . . 26
FIFO active . . . . . 16
Function group
BASIC CALIBRATION. . . . . 22
LINEARIZATION. . . . . 23
SERVICE . . . . . 23
USER INFORMATION. . . . . 24
WORKING PARAMETERS. . . . . 21

## G
GL German Lloyd marine approval . . . . . 8

## H
HART® function matrix . . . . . 18
HART® hand operating module DXR 275/375 . . . . . 13
HART® protocol. . . . . 14
Hazardous areas . . . . . 7
Head transmitter . . . . . 9

## I
Installation angle. . . . . 9
Installation point . . . . . 9

## L
legend plates . . . . . 8

## M
Measurement range excess . . . . . 16
Measurement range undercut . . . . . 16

## R
Returns . . . . . 28

## S
Safety Instrumented Systems (SIS) . . . . . 6
Safety Message . . . . . 4
Sensor break . . . . . 16
Sensor Checkout . . . . . 26
sensor short circuit . . . . . 16
Short form instructions . . . . . 5

## T
Technical advancement . . . . . 7
Terminal layout . . . . . 12

## U
UL recognized component. . . . . 8

## W
Windows NT® Version 4.0 . . . . . 16
Windows® 2000. . . . . 16
Windows® XP . . . . . 16

# IMPORTANT NOTICE
# RETURN AUTHORIZATION POLICY

Endress+Hauser must pre-approve and assign a Return Authorization number to any instrument you plan to return. Please identify the Return Authorization number clearly on all shipping cartons and paperwork.

Please note that the issuance of a Return Authorization number does not automatically mean that credit will be issued, or that the return is covered by our warranty. An Endress+Hauser associate will contact you regarding the disposition of your returned equipment.

In order to serve you better, and to protect our employees from any potentially hazardous contaminants, Endress+Hauser must return unopened, at the sender's expense, all items that do not have a Return Authorization number.

To get a Return Authorization number for **credit**, call **888-ENDRESS**

To get a Return Authorization number for **calibration or repair**, call **800-642-8737**

To get a Return Authorization number **in Canada**, call **800-668-3199**

Please be sure to include the following information when requesting a Return Authorization number. This information will help us speed up the repair and return process.

Customer name:
Customer address:
Customer phone number:
Customer contact:
Equipment type:
Original sales order or purchase order number:
Reason for return:
Failure description, if applicable:
Process material(s) to which the equipment has been exposed:

> OSHA Hazard Communication Standard 29CFR 1910.1200 mandates that we take specific steps to protect our employees from exposure to potentially hazardous materials. Therefore, all equipment so exposed must be accompanied by a letter certifying that the equipment has been decontaminated prior to its acceptance by Endress+Hauser.

The employees of Endress+Hauser sincerely appreciate your cooperation in following this policy.

Address your equipment to:

Endress+Hauser, Inc.
Flowtec, Dock C
2330 Endress Place
Greenwood, IN 46143
Return Authorization number:

In Canada:

Endress+Hauser Canada
1075 Sutton Drive
Burlington, Ontario
Canada L7L 5Z8
Return Authorization number:

Endress+Hauser

People for Process Automation

Effective November 1987
Revised August 2004

## LEVEL

- Capacitance (RF)
- Mechanical
- Vibration
- Ultrasonic
- Radar
- Guided Radar (TDR)
- Hydrostatic



## FLOW

- Electromagnetic
- Vortex Shedding
- Coriolis Mass Flow
- Ultrasonic



## PRESSURE

- Gauge/Absolute
- Differential Pressure
- Hydrostatic



## ANALYSIS

- Conductivity
- pH/ORP
- Chlorine
- Dissolved Oxygen
- Turbidity
- Chemical Analyzers
- Nitrate Sensors
- Sludge Level



## RECORDERS

- Paperless Recorders
- Visual Data Managers
- Safety Data Managers



## TEMPERATURE

- Temperature Transmitters
- RTDs / Thermocouples



## COMPONENTS

- Displays
- Active Barriers
- Process Transmitters
- Power Supplies



## SERVICE

- Total support for you and your instruments



## E-direct

**www.us.endress.com/e-direct**

- Shop on-line for low-cost instruments, devices and components





| United States | Canada | Mexico |
|---|---|---|
| Endress+Hauser, Inc.<br>2350 Endress Place<br>Greenwood, IN 46143<br>Tel: 317-535-7138<br>Sales: 888-ENDRESS<br>Service: 800-642-8737<br>FAX: 317-535-8498<br>inquiry@us.endress.com<br>www.us.endress.com | Endress+Hauser Canada<br>1075 Sutton Drive<br>Burlington, ON L7L 5Z8<br>Tel: 905-681-9292<br>800-668-3199<br>FAX: 905-681-9444<br>www.ca.endress.com | Endress+Hauser<br>Paseo del Pedregal No. 610<br>Col, Jardines del Pedregal<br>01900, Mexico D. F.<br>Mexico<br>Tel: 525-568-2405<br>FAX: 525-568-7459 |


Endress+Hauser

People for Process Automation

© 2004 Endress+Hauser, Inc.

BA155R/24/ae/10.04
51006562
FM+SGML6.0